Spacers

Stainless Steel, EHEDG and DGUV Certified, Hygienic Design

SPECIFICATION

Types
- Type **A1**: Through-hole
- Type **A2**: Through-hole with continuous thread
- Type **A3**: Through-hole with thread on both sides

Spacers
Stainless steel AISI 316L
Matte finish (Ra < 0.8 µm) **MT**

Sealing ring
- HNBR **H**
  Operating temperature -25 °C to +150 °C
- EPDM **E**
  Operating temperature -40 °C to +120 °C
- FKM **F**
  Operating temperature -5 °C to +200 °C
- FDA compliant material
- Blue
- Hardness 85 ±5 Shore A

INFORMATION

Spacers GN 6226 are intended for use in hygienic areas. The versions with sealing ring H and E comply additionally according to the guidelines of the EHEDG and DGUV Test guidelines. The sealed mounting surfaces enable fastening without dead spaces. The high quality finish prevents adherence of dirt and facilitates cleaning.
Spacers are used to fasten parts at an offset parallel to their plane of installation. This avoids doubling up on surfaces and leaves space for cleaning. The internal thread can alternatively be used as a through hole by a screw with a smaller thread.

ACCESSORY

- GN 7600 Sealing Rings (see page)

TECHNICAL INFORMATION

- Plastic Characteristics (see page A2)
- Stainless Steel Characteristics (see page A26)

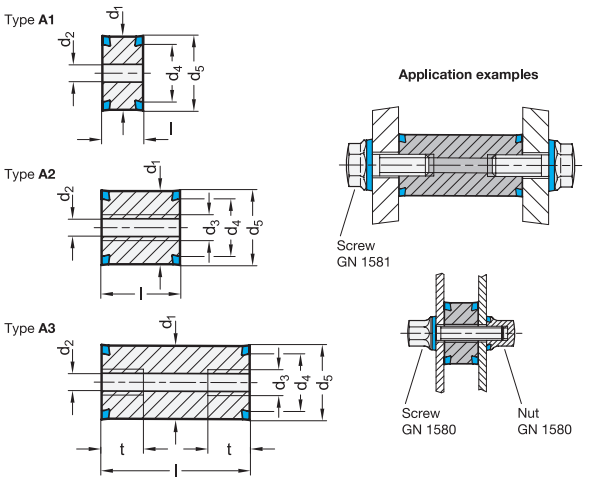

*Complete with
H E F

GN 6226-A1

STAINLESS STEEL

Description	d_1	Length l ±0.1	d_2 Through-hole for screw	d_4	d_5	⚖
GN 6226-22-10-A1-MT-*	22	10	M 5	18	22.8	26
GN 6226-22-12-A1-MT-*	22	12	M 5	18	22.8	32
GN 6226-22-16-A1-MT-*	22	16	M 5	18	22.8	43
GN 6226-28-12-A1-MT-*	28	12	M 6	24	28.8	52
GN 6226-28-16-A1-MT-*	28	16	M 6	24	28.8	70
GN 6226-28-20-A1-MT-*	28	20	M 6	24	28.8	89
GN 6226-34-12-A1-MT-*	34	12	M 8	30	34.8	77
GN 6226-34-16-A1-MT-*	34	16	M 8	30	34.8	104
GN 6226-34-20-A1-MT-*	34	20	M 8	30	34.8	131

GN 6226-A2

STAINLESS STEEL

Description	d_1	Length l ±0.1	d_2 Through-hole for screw	d_3 Thread	d_4	d_5	⚖
GN 6226-22-20-A2-MT-*	22	20	M 5	M 6	18	22.8	55
GN 6226-28-30-A2-MT-*	28	30	M 6	M 8	24	28.8	135
GN 6226-34-30-A2-MT-*	34	30	M 8	M 10	30	34.8	199

Weight Material H

*Complete with
H E F

GN 6226-A3

STAINLESS STEEL

Description	d_1	Length l ±0.2	d_2 Through-hole for screw	d_3 Thread	d_4	d_5	t min.	⚖
GN 6226-22-30-A3-MT-*	22	30	M 5	M 6	18	22.8	12	83
GN 6226-22-50-A3-MT-*	22	50	M 5	M 6	18	22.8	12	141
GN 6226-28-50-A3-MT-*	28	50	M 6	M 8	24	28.8	16	228
GN 6226-28-75-A3-MT-*	28	75	M 6	M 8	24	28.8	16	335
GN 6226-34-50-A3-MT-*	34	50	M 8	M 10	30	34.8	20	344
GN 6226-34-100-A3-MT-*	34	100	M 8	M 10	30	34.8	20	676

Weight Material H

ELESA and GANTER models all rights reserved in accordance with the law.
Always mention the source when reproducing our drawings.